LNG FUEL SYSTEM TECHNOLOGY

LNG FUEL SYSTEM DESIGN

Definition of system hardware and related arrangement with vessel interfaces.

- Tank type and position
- Gas processing arrangement
- Hazardous zones plan
- Gas safety & gas control system
- Interfaces to engines and vessel automation

RISK ASSESSMENT / CLASS CONFORMITY

Risk → No risk

Preparation and execution of project/vessel related HAZID/HAZOP workshop.

- Analysis of the designed LNG fuel system in terms of potential hazards occurring in operation, bunkering etc.
- Assessment of the identified hazards
- Draft of required measures to reduce single risks as recommendations
- Implementation of workshop recommendations and update of the LNG fuel system design

SYSTEM SPECIFICATION

Preparation of a tender and/or detail specification of the LNG fuel system.

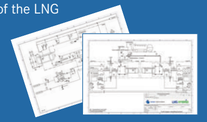

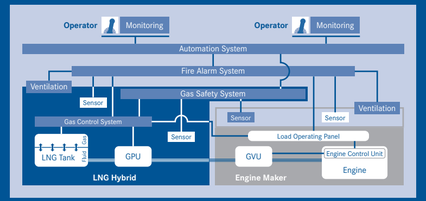

HARDWARE SUPPLY

LNG Hybrid supplies a full package of the specified LNG fuel system including gas safety and gas control system to your project.

FUNDING SUPPORT

Becker Marine Systems has extensive experience in applying for and receiving funding for innovative marine technologies. We'll work out all the necessary requirements to qualify for current funding programmes related to hybrid propulsion and LNG fuel system technology.

HYBRID PROPULSION TECHNOLOGY

FEASIBILITY STUDY

IDENTIFICATION OF TECHNICAL AND OPERATIONAL REQUIREMENTS

- Collection of relevant core technical data related to your specific vessel/project
- Identification of the scheduled operational profile

SIMULATION OF OPERATIONAL PROFILE

Based on the specific customer information describing: **Requested power / sailing times under different conditions / operational modes / nautical requirements / given schedules and time limits**, LNG Hybrid simulates all relevant parameters in a given period of time to gain a realistic picture of the selected propulsion concept to define the most suitable engine types and potential battery capacities.

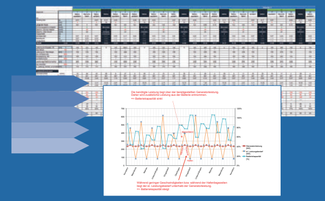

SYSTEM CONFIGURATION & DEFINITION

Based on the results gained from the simulation, and taking technical feasibility and economic viability into account, LNG Hybrid defines the most suitable system configuration and options.

DECISION BASIS

DETAILED SPECIFICATION

LNG Hybrid provides a detailed specification of the propulsion system.

HARDWARE SUPPLY

The full hardware package for the specified propulsion system is delivered. To round out our services, LNG Hybrid also provides supervision of the installation process.

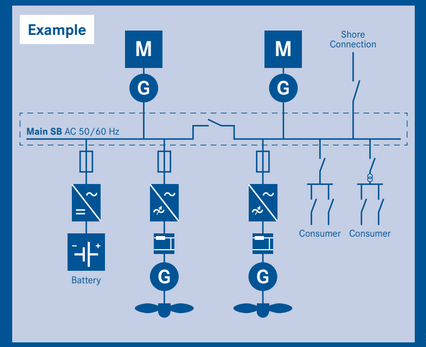

becker marine systems

environmentally friendly
becker products

LNG HYBRID CONCEPTS

The international maritime industry faces huge challenges. Higher efficiency, greater sustainability and increased safety are in demand on the world's markets. As an innovative ship supplier Becker Marine Systems contributes towards meeting these goals with established products and evolving technologies. As a big step in this direction Becker Marine Systems is committed to the establishment of environmentally-friendly liquefied natural gas (LNG) in the maritime industry. With LNG as a low emission fuel Becker develops clean shore power technologies and marine fuel systems.

LNG Hybrid, a division of Becker Marine Systems, was founded in 2012 with the focus on LNG fuel system technology and hybrid propulsion systems for inland, coastal and seagoing vessels. The product portfolio ranges from technical and economic studies and policy to the development and specification of technology and the full supply of hardware. A focus lies on the customer support in terms funding processes and tendering documents.

Hybrid Port Energy (HPE) is a wholly owned subsidiary of Becker Marine Systems. HPE delivers and operates shore power technology such as the LNG Barge *Hummel* which supplies 7.5 MW of clean energy to the *AIDAsol* cruise ship at the port of Hamburg. Future HPE barges will be able to supply up to 14 MW to cruise ships or port-based industry. In order to provide flexible and low emission shore power to container ships as well, as a pilot project at the port of Hamburg, mobile LNG PowerPac® units will be put into operation starting in 2017.

Manoeuvring Systems
Energy-Saving Devices
LNG Hybrid Concepts
www.becker-marine-systems.com

HYBRID PORT ENERGY

CLEAN & MOBILE SHORE POWER

LNG HYBRID BARGE

CLEAN ENERGY FOR CRUISE SHIPS AT PORT

Becker Marine Systems developed the advanced LNG Hybrid Barge, an innovative solution for improving air quality at harbour cities by reducing emissions from cruise ships at port. The LNG Hybrid Barge produces significantly lower emissions than the diesel engines used to generate power on board cruise ships.

The LNG Hybrid Barge has been shown to reduce CO_2 emissions by 20% and NO_x by 80% with no particulates or sulfur emissions whatsoever. Designed as a flexible and mobile solution, the barge supplies power to cruise ships during the summer season and is able to operate as a floating power and heat plant in the winter.

Classified as a seagoing vessel, the world's first LNG Hybrid Barge in operation at the port of Hamburg is 76.0 m long, 11.4 m wide with a draught of 2.5 m. It is equipped with modular, silently operating 7.5 MW LNG GenSet power plants fuelled by two 17 t LNG containers.

ADVANTAGES OF THE LNG HYBRID BARGE:

- Cold ironing customised for cruise ships
- Significant reduction of harmful emissions
- Silent operation
- Guaranteed independent power supply
- 100% maritime solution
- In line with energy laws – no state taxes, grid fees etc.
- Mobility and flexibility – multi-customer concept

COMPARISON WITH OTHER SUPPLY TECHNIQUES

	Energy Sector Triangle	Self Supply	Shore Power	LNG Hybrid Barge
The Environment		Marine gas oil CO_2 ●● NO_x ●● SO_x ●● PM* ●●	Power mix (Germany) CO_2 ● NO_x ● SO_x ●● PM* ●●	LNG (Liquefied Natural Gas) CO_2 ● NO_x ●● SO_x ●● PM* ●●
Economic Feasibility		Cost efficiency ● ▶ But no public acceptance!	Risk of utilisation ●● ▶ Only stationary use (450 h/year) ▶ In conflict with energy laws and regulations ▶ Fluctuating demand (uneconomic)	No risk of utilisation ● ▶ Year-round concept (365 days/year) ▶ Generates power, heat – and revenue ▶ In line with energy laws and regulations
Guaranteed Supply		State of the art ● ▶ Existing solution ▶ But no public acceptance!	Grid-dependent ● ▶ Low capacity (city grid) ▶ 50 Hz frequency (cruise ships 60 Hz)	Grid-independent ●● ▶ Guaranteed supply ▶ 60 Hz frequency (cruise ships) ▶ Available on demand (24/7)

●● Very negative ● Negative ● Positive ●● Very positive *Particulate Matter

LNG POWERPAC®

CLEAN ENERGY FOR CONTAINER VESSELS AT PORT

ADVANTAGES OF THE LNG POWERPAC®:

- Cold ironing customised for container ships
- A flexible, independent on-board power supply
- Significant reduction of harmful emissions
- Quick implementation – usable at any port
- 100% maritime solution
- In line with energy laws – no state taxes, grid fees etc.
- Suitable for all kinds of container terminal operations

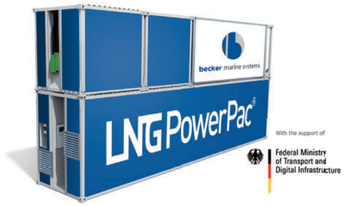

LNG POWERPAC® HANDLING CHAIN